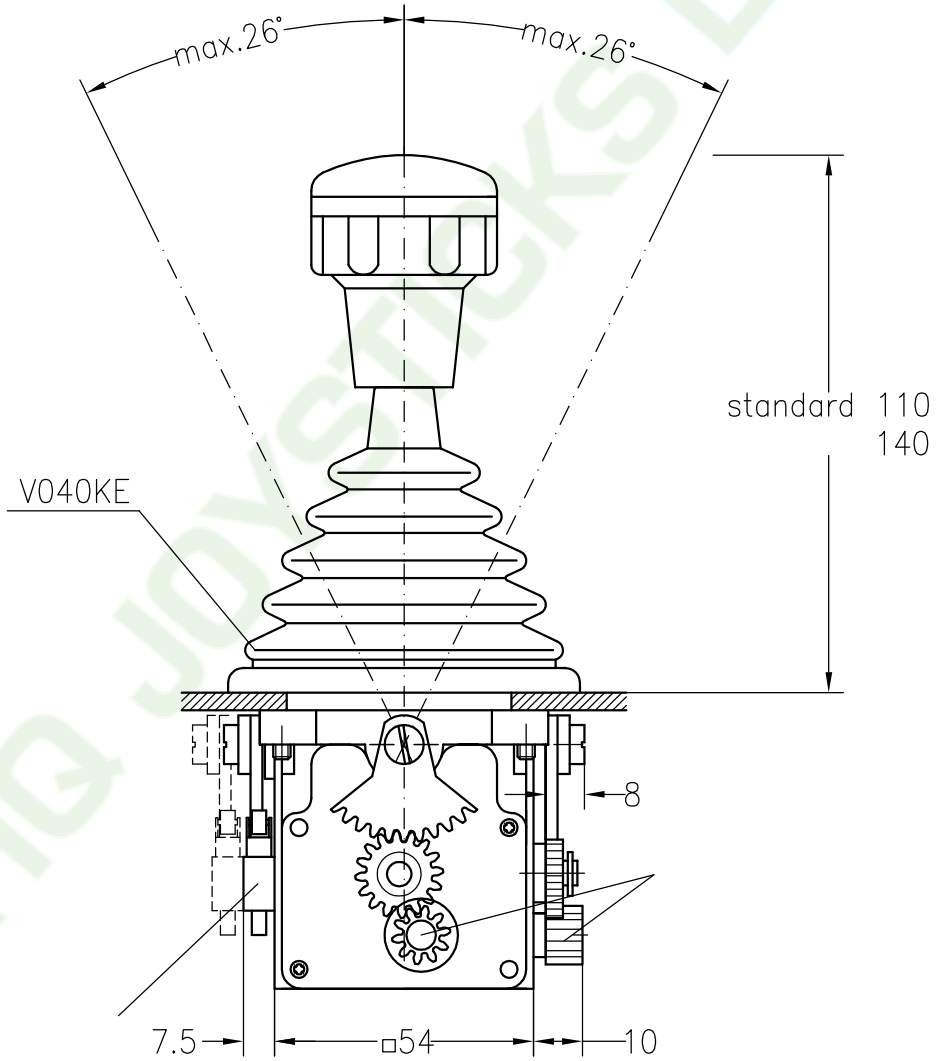

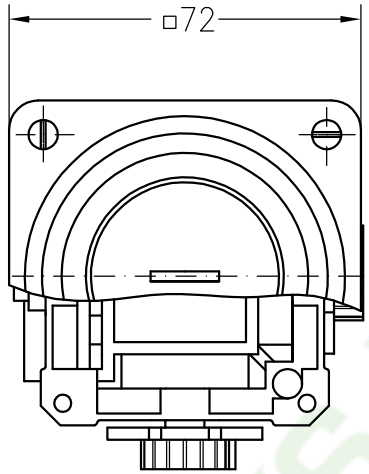

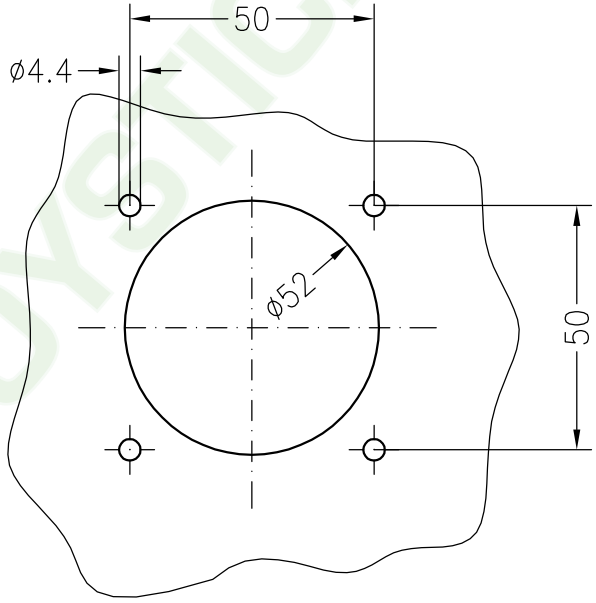

mounting dimensions

© HQ JOYSTICKS LTD